TR-WM03-B-IN 3-inch Fixed Dome Mount

Specifications

Bracket	TR-WM03-B-IN
Application	Wall installation for IPC32X and IPC361X series
Dimensions	126mmx126mmx188mm (5” x5” x7.4”)
Weight	0.5kg(1.1lb)
Material	Aluminum alloy

Dimensions

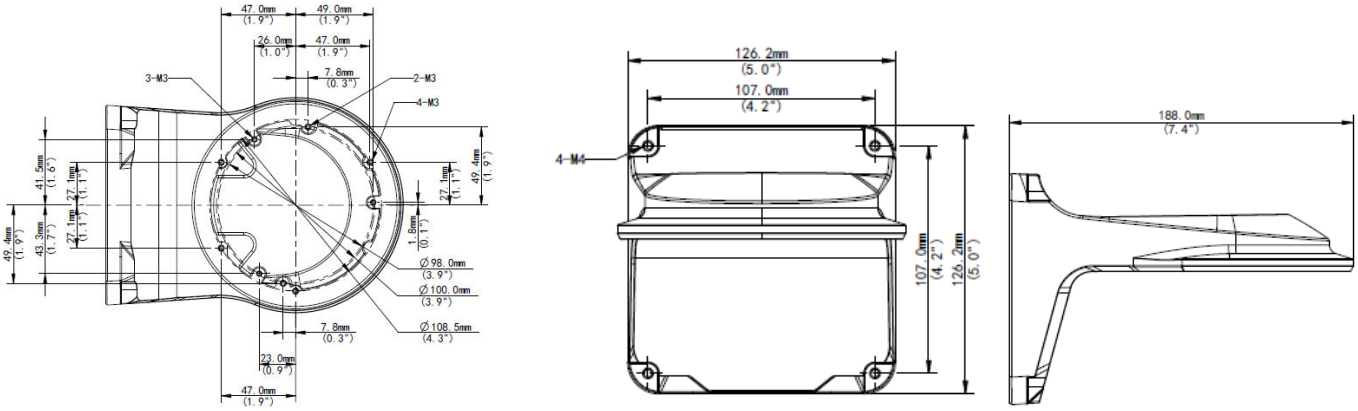

Zhejiang Uniview Technologies Co.,Ltd.

South Tower, Building 10, Wanlun Science Park, 88 Jiangling Road, Hangzhou, P.R.China 310051

Email：overseasbusiness@uniview.com;globalsupport@uniview.com

http://www.uniview.com

©2017 Zhejiang Uniview Technologies Co.,Ltd. All rights reserved.

*Product specifications and availability are subject to change without notice.