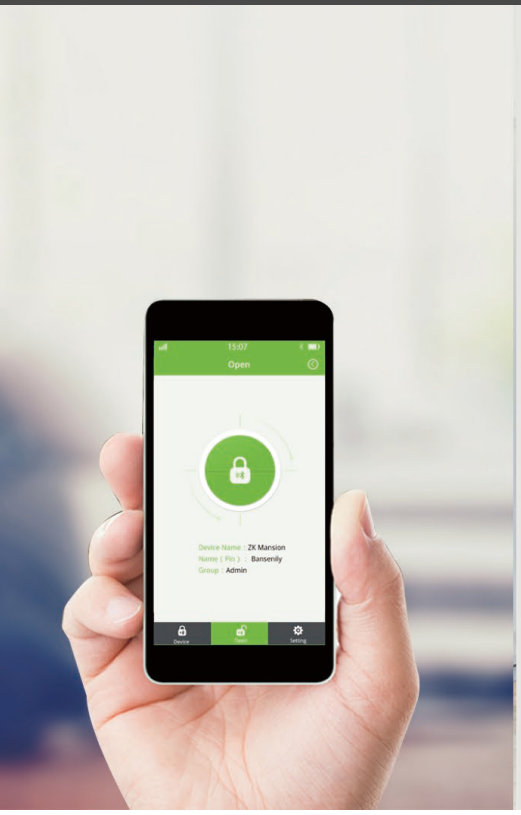

DL30B Series

Smart Phone, Smart Lock .

Your smart phone is now your key.

App Key

Unlock the door with smart phone

Visitor Password

Send unique access code from your phone anywhere anytime

Time Table

Select the day(s) and time table(s) you would like to provide guest access to your lock

User Management

Define user name/user role, check user, delete user

Records Checking

Keep track of who and when enters your home

BLE 4.0

Less power consumption, longer battery life

Features

- Various access for your convenience - password/card/key/smart phone
- American standard single latch for easy replacement and installation
- Enhanced security by random password for code access
- Idle handle design to prevent from forcible entry
- Voice guide for easier and more convenient use
- Voice volume is adjustable, includes mute mode
- Smart alarm for low battery & illegal operation
- Normal open mode
- External terminals to draw back-up power from a 9V battery

Specifications

Model	DL30B	DL30B-MF
Material	Zinc Alloy	
Password capacity	100	
Card capacity	100	
Card Module	ID	Mifare
Wireless Module	BLE4.0	
Power Supply	4×AA Alkaline battery (NOT supplied)	
Door Thickness	30-38 mm (standard) 39-36 mm (standard) 47-54 mm (standard) 55-60 mm (optional)	
Dimensions	Front: 69(W)× 155(L) ×35(D) Back : 69(W) ×155(L) ×25(D)	

ZKBioBL APP Download
For Android Platform

ZKBioBL APP Download
For IOS Platform

Dimensions

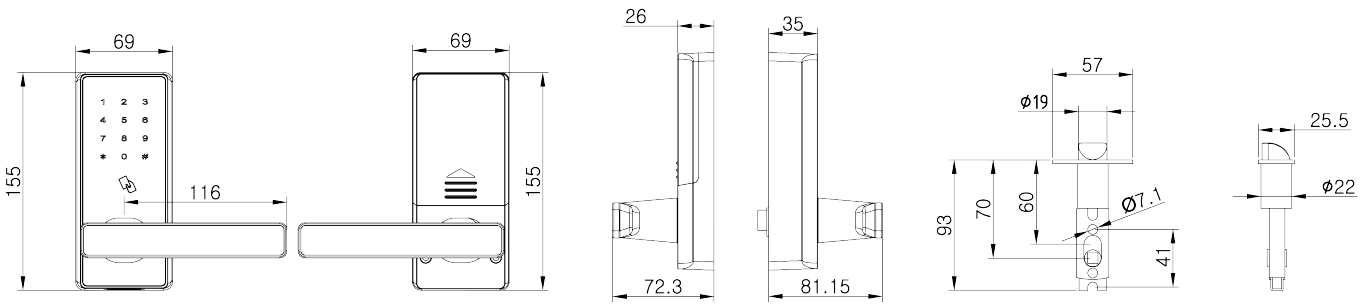

More details

ZKTECO CO.,LTD.
www.zkteco.com
E-mail: sales@zkteco.com

© Copyright 2017. ZKTECO CO., LTD.ZKTeco Logo is a registered trademark of ZKTeco or a related company. All other product and company names mentioned are used for identification purposes only and may be the trademarks of their respective owners. All specifications are subject to change without notice. All rights reserved.